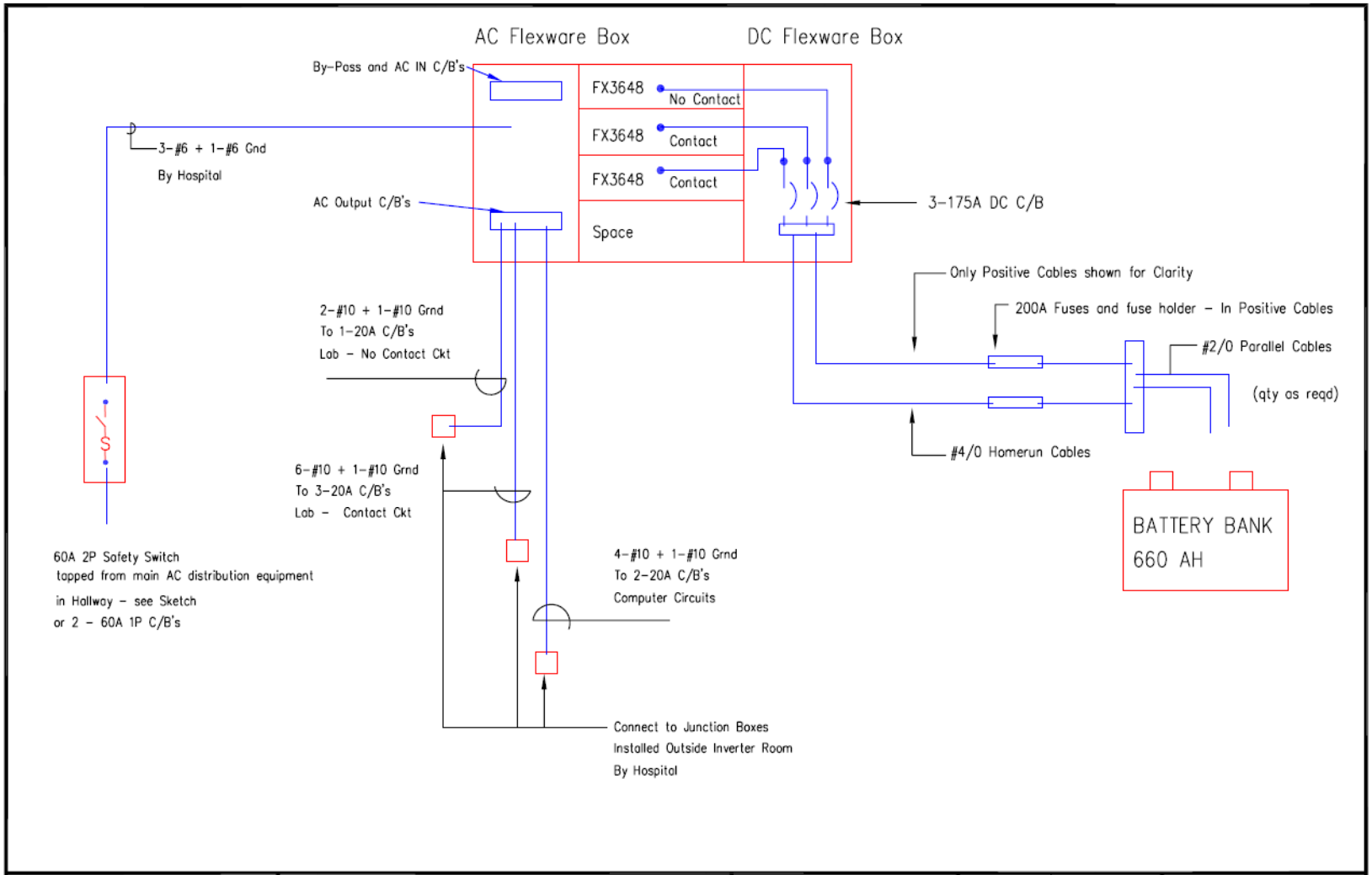

Tetra Tech Inc	Project: **Inverter / Battery System** **Au Borgne**	Title: System Block Diagram	Project No.	Sheet: Sheet 1 of 2
			Date 13-JAN-09	
			Scale	
			Checked By WR	

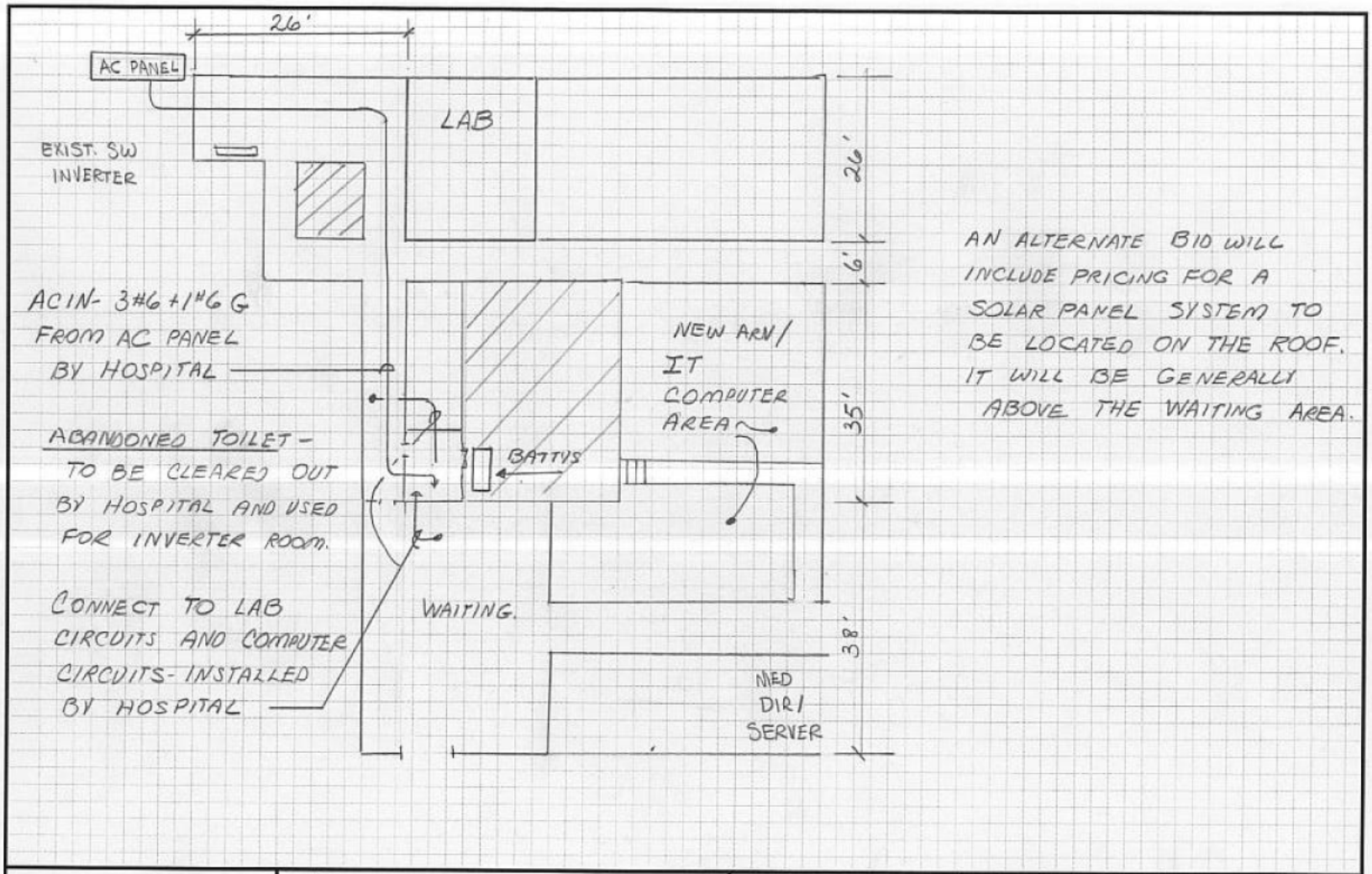

AN ALTERNATE BID WILL INCLUDE PRICING FOR A SOLAR PANEL SYSTEM TO BE LOCATED ON THE ROOF. IT WILL BE GENERALLY ABOVE THE WAITING AREA.

Tetra Tech Inc	Project: INVERTER BATTERY SYSTEM AU BORGNE	Title: SITE PLAN	Project No.		Sheet: SHEET 2 OF 2
			Date	12-JAN-09	
			Scale	NTS	
			Checked By	WR	