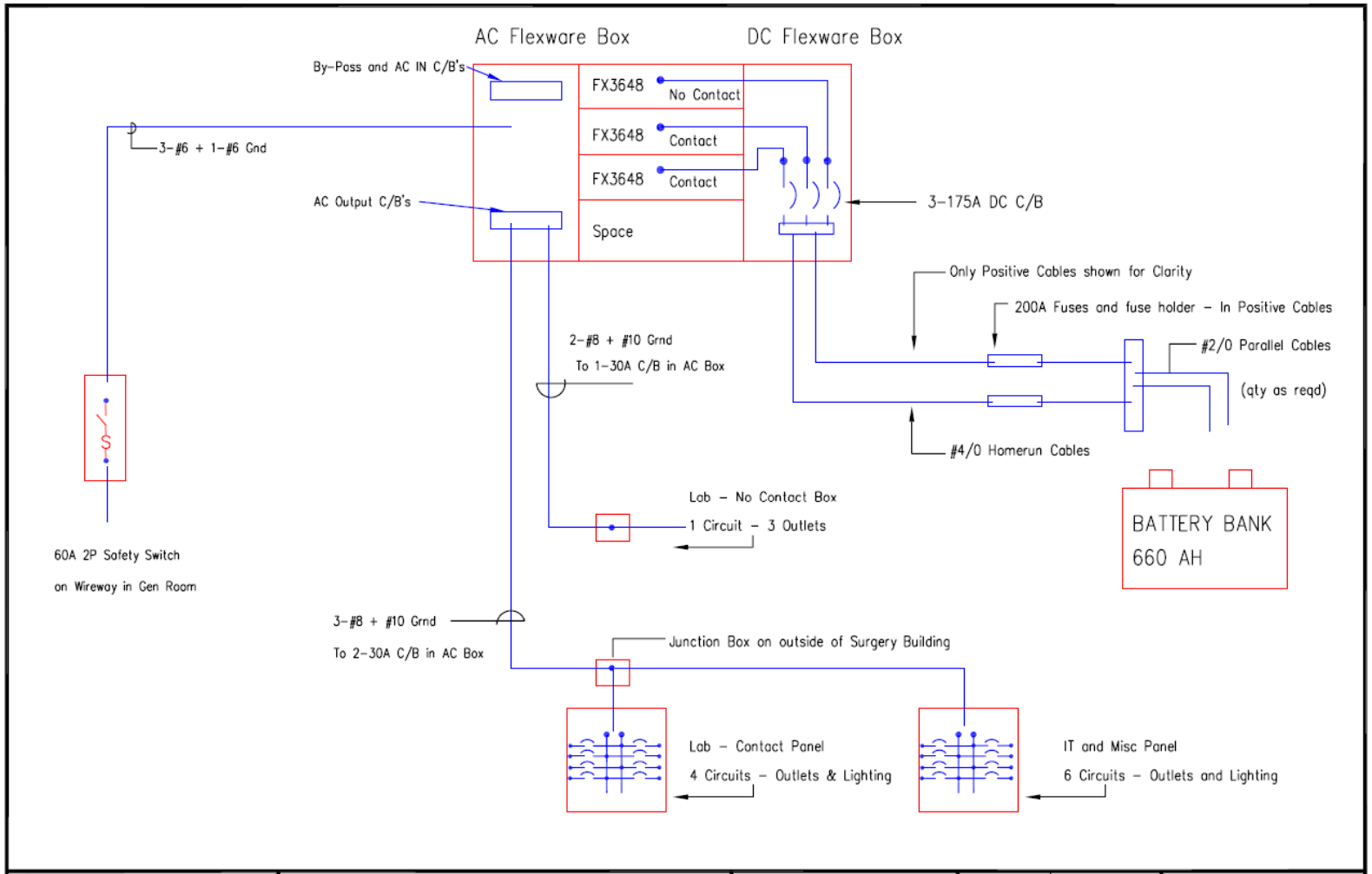

Tetra Tech Inc	Project: **Inverter / Battery System** **Belladere**	Title: System Block Diagram	Project No.		Sheet: Sheet 1 of 3
			Date	13-JAN-09	
			Scale		
			Checked By	WR	

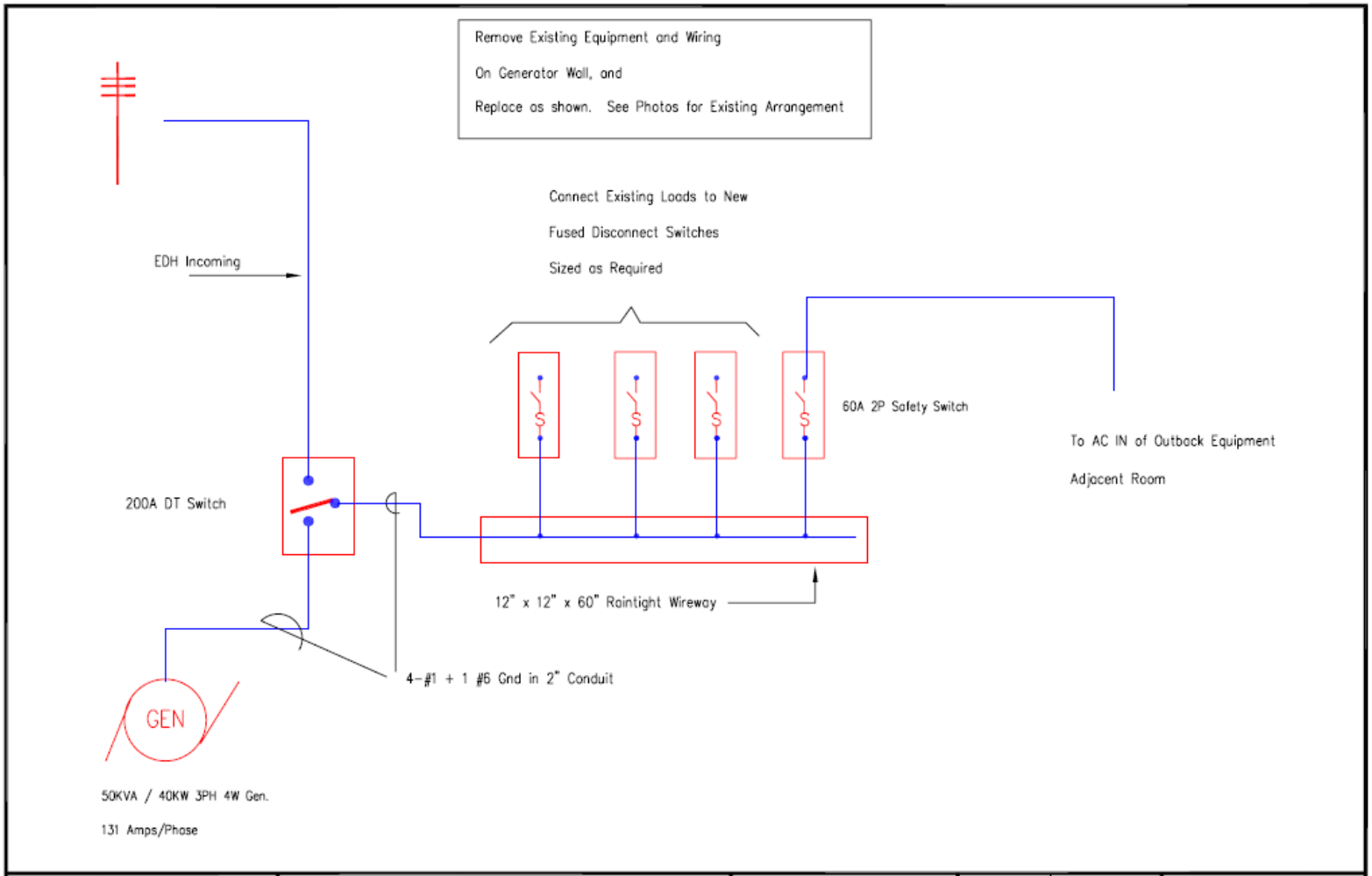

Tetra Tech Inc	Project: **Inverter / Battery System** **Belladere**	Title: Main Power Block Diagram	Project No.		Sheet: Sheet 2 of 3
			Date	11-JAN-09	
			Scale		
			Checked By	WR	

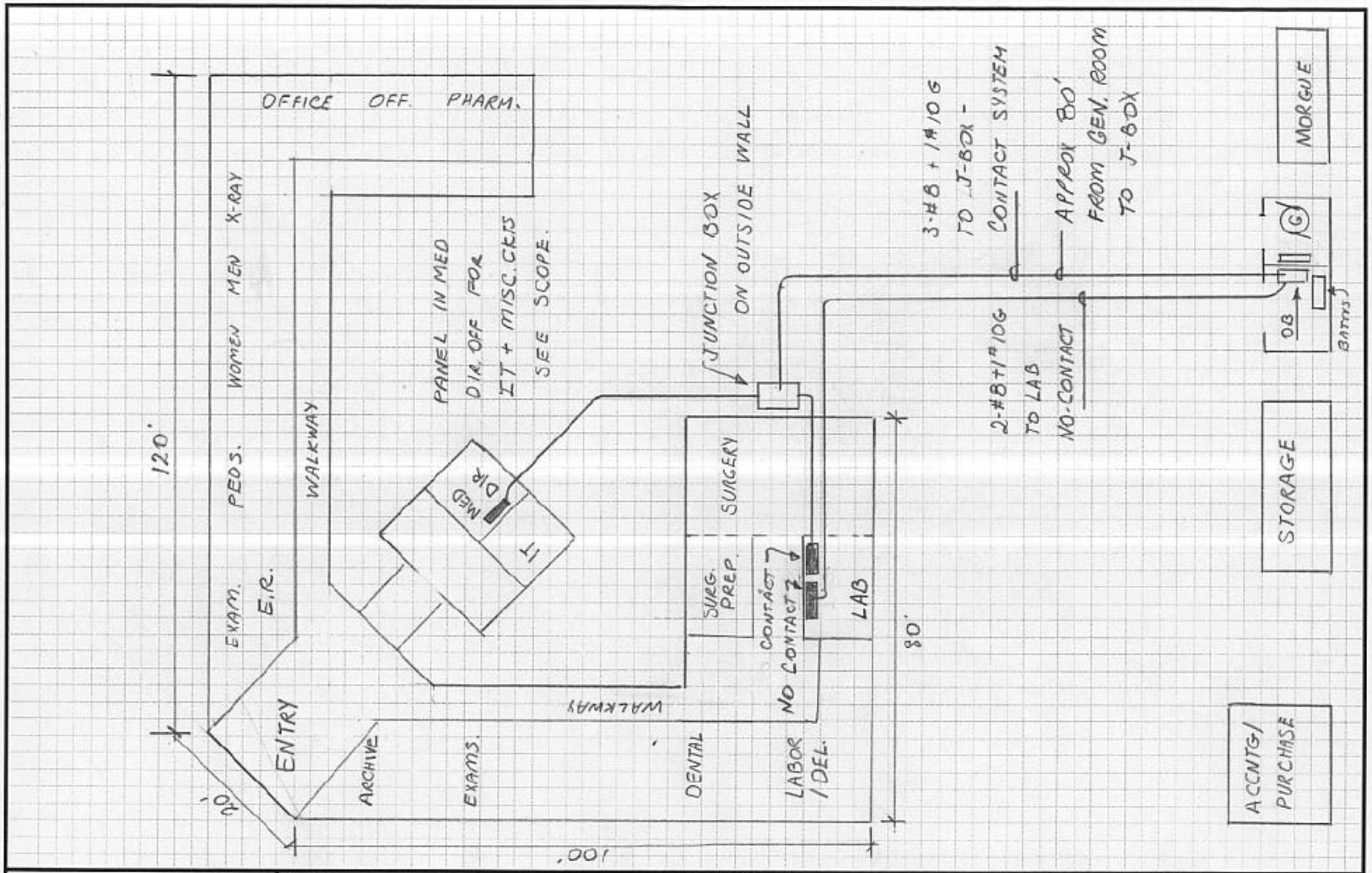

Tetra Tech Inc	Project: INVERTER / BATTERY SYSTEM BELLADERE	Title: SITE PLAN	Project No.		Sheet: SHEET 3 OF 3
			Date	11-JAN-09	
			Scale	NTS	
			Checked By	WR	