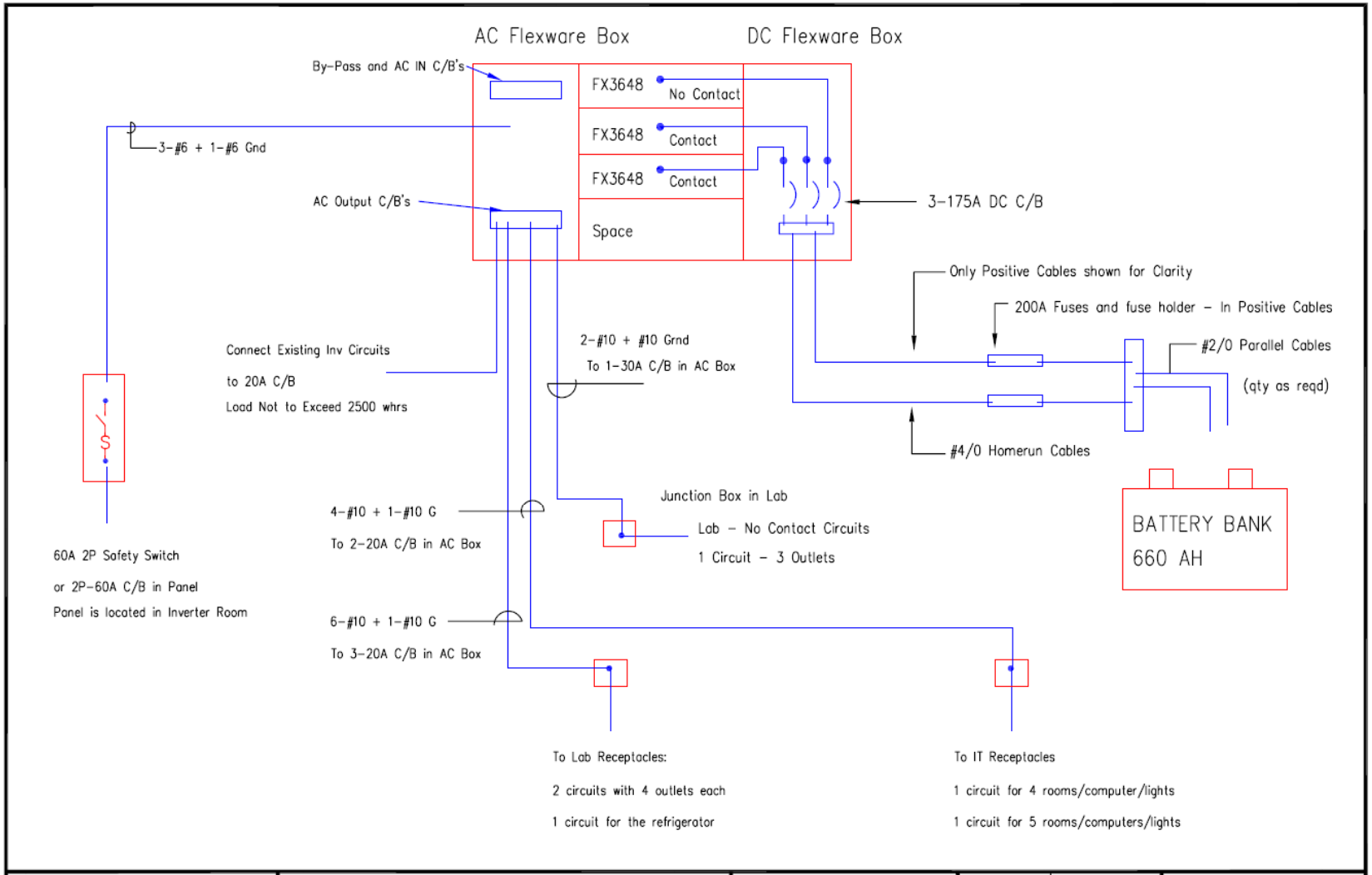

Tetra Tech Inc	Project: **Inverter / Battery System** **Fort Libertie**	Title: System Block Diagram	Project No.		Sheet: Sheet 1 of 2
			Date	13-JAN-09	
			Scale		
			Checked By	WR	

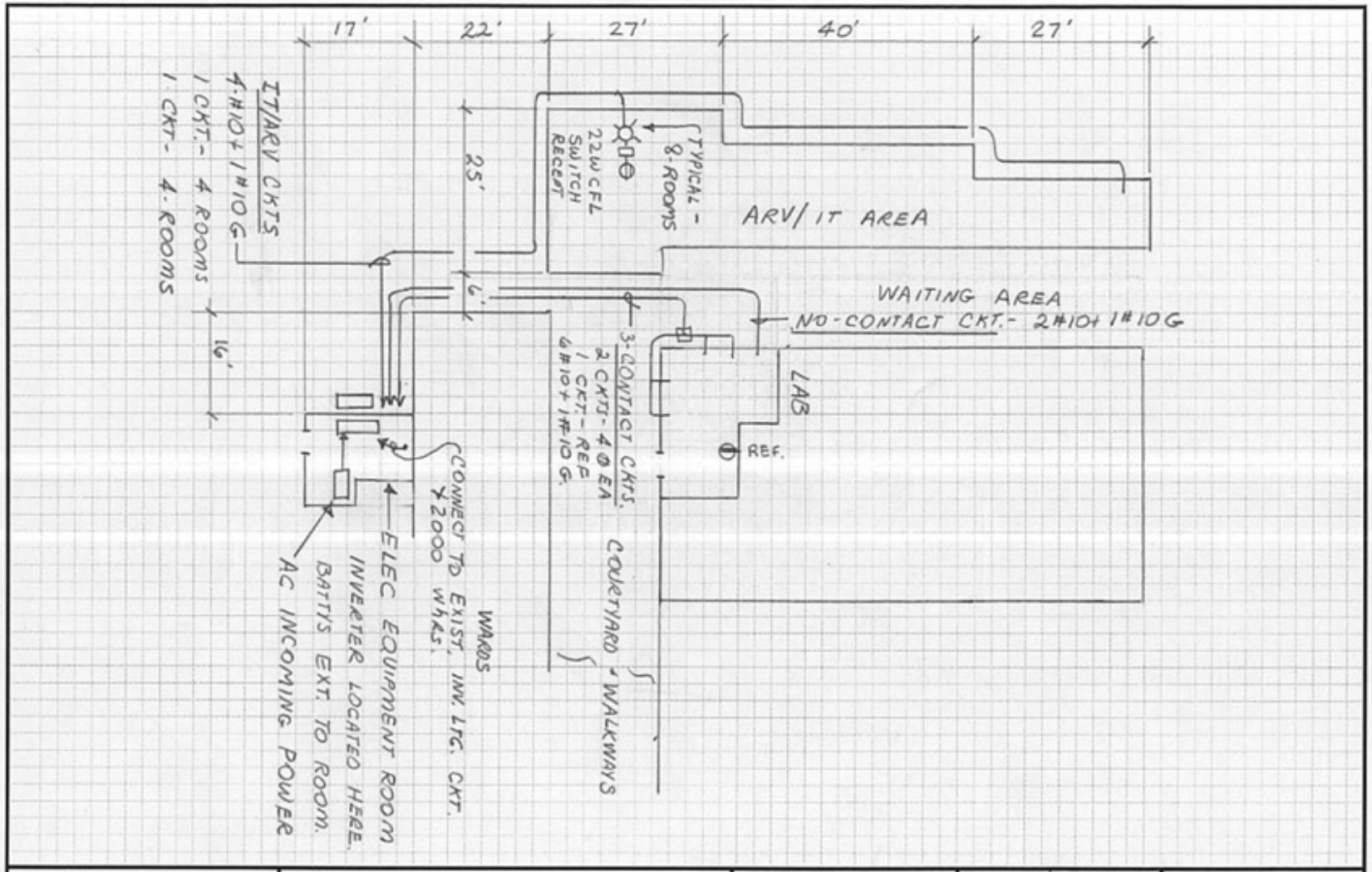

Tetra Tech Inc	Project: INVERTER / BATTERY SYST. FORT LIBERTIE	Title: SITE PLAN	Project No. / Date / Scale / Checked By	Sheet: SHEET 2 of 2